VOLUME 12

McGinnis Chen Associates Inc
ARCHITECTS I ENGINEERS

Architechnics

A JOURNAL OF ARCHITECTURAL TECHNOLOGY

Volume 12:
FALL 2009

IN THIS ISSUE . . .

Architechnics is the architectural journal of McGinnis Chen Associates, Inc.

Architechnics is published to inform our clients and colleagues of issues and problems addressed in our practice. By publication of technical articles and case studies, we hope to circulate information that will be helpful to practicing architects, building managers and others in the building trade and related professions.

Due to the unique nature of our practice, McGinnis Chen Associates is often the beneficiary of hindsight. That is, we are often asked to examine, analyze and repair failed building systems principally regarding the building envelope.

Having done this type of work for over forty years, our office has accumulated a wealth of insight into the causes of many different types of building failures and how they might be rectified or avoided. We routinely work on buildings ranging from residences to high-rises, commercial to governmental, and old to new.

CEMENT PLASTER – DURABLE DESIGN AND CONSTRUCTION

by Majid Azadeh, PE

Cement plaster is a cost effective cladding assembly, which is predominantly used over cavity wall construction in the United States. This assembly – also known as a concealed barrier system – relies on a hidden drainage plane to protect wall cavities from incidental moisture. A recent wave of failures of plaster-clad structures and ensuing litigations has focused the industry's attention on workmanship and continuity of the drainage plane. The durability of the system, however, is seldom a consideration, and is often neglected during value engineering processes. Recent focus on sustainability and soaring remedial repair costs has forced discussion of the assembly's durability.

The term "stucco" is widely used to describe the cement plaster used for coating exterior surfaces. When used over cavity wall construction, stucco is applied over a weather resistant barrier (WRB), also referred to as the drainage plane. In such applications, metal lath is used to provide reinforcement and mechanical attachment. Load transfer to the superstructure is achieved as lath fasteners puncture the WRB and engage the underlying framing.

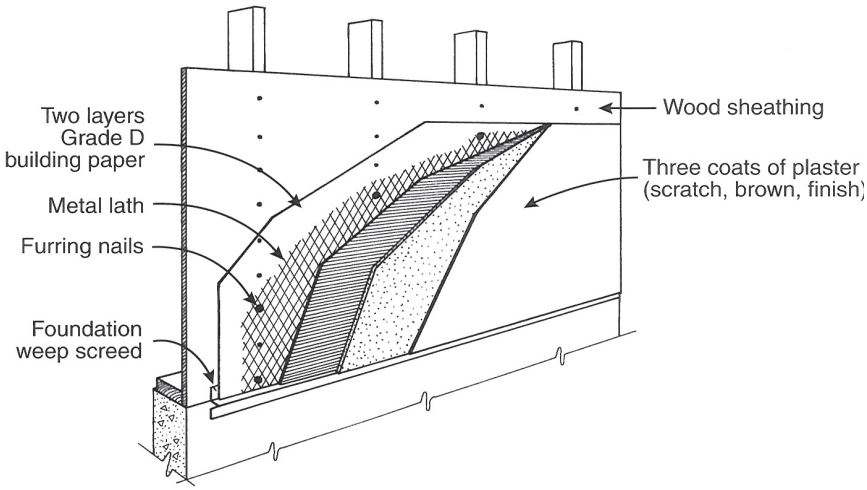

Figure 1 – Cement Plaster Assembly over Sheathed Construction

The prevailing standards require two layers of 60-minute building paper over wood-framed cavity wall construction with sheathing (Figure 1), and a single layer of 60-minute building paper over open stud framing (Figure 2).

(continued on page 3)

SNAIL BEHAVIOR, *REVISITED*

by Tracy Yang

Last Fall, MCA published an Architechnics article discussing snails' peculiar affinity for silicone sealants. Since then, MCA has received many comments and follow-up questions that shed new light on this limited research. Understanding the complex nature of sealant compositions without full technical knowledge was the most difficult obstacle of the article, and this author used her powers of investigation, observation and logical deductions based on the information available to her in those conclusions. Having now had the opportunity to speak seriously with various product reps and chemists (as seriously as possible, considering the subject matter), MCA would like to share the following clarifications with the construction community.

First, acetic acid and alcohol are not the only byproducts that sealants produce. Several other recently developed categories of sealants release different end products during the cure process. Further, sealants 2-4 (see page 2 photos of original article) were misidentified as Acetoxy sealants (i.e. those that have acetic acid byproducts). These silicones cannot liberate acetic acid during cure; contact with calcium carbonate would create an acid-base reaction within the tubes themselves.

A second important piece of information is that most urethane sealants actually do contain calcium carbonate, for the same reason as silicones: it acts as an inert filler that creates the paste-like consistency allowing the sealant to be manipulated in the field. As this material is non-hazardous, manufacturers are not required to include it as a component on their MSDS sheets, though some do for the sake of thoroughness. It appears to be random coincidence that the silicones selected in the initial testing listed this compound on their respective MSDS sheets, while the urethane's did not.

Finally, there was some speculation in the last article as to why the snails were seemingly unharmed by the other toxic materials in sealants. The assumption made in this section is that humans would be harmed from silicone consumption, which made it baffling that the snails were unaffected. One product rep explained that while many components of silicone rubber are listed as hazardous on the MSDS sheets, this refers to the materials' wet state, and an ingested piece of cured silicone is "simply inert and would pass on its merry way as if it were bubble gum." (This author has been strongly advised not to test this concept by sampling cured silicone, but rather take the product rep's word for it.)

Despite the misconceptions of the previous article, professionals in the sealant industry seem to agree with the conclusion that the primary reason the gastropods are attacking window sealants is to consume calcium carbonate. These new pieces of information merely illustrate that their deterrants are a bit more complex; since it appears some sealant compositions do contain calcium carbonate yet simultaneously deter snails from consuming them.

MCA has been glad to spread awareness of this behavior and hopes this research will be a starting point for others to prepare their own tests, should their curiosities compel them.

RACING FOR CHARITY

On July 18th, three members of the MCA staff teamed up to compete in the 36th annual Eppie's Great Race *(www.thegreatrace.org)*. This event, known as "the world's oldest triathlon," is held along the American River Parkway in Sacramento, California, and consists of three events: a 5.82 mile run, 12.5 mile cycle and a 6.35 mile paddle.

After months of extensive training (or weeks, depending on the person), MCA's team raced to the finish line, placing 11th in the corporate division. All proceeds benefitted the Sacramento County Therapeutic Recreation Services.

Photograph: Team MCA at the finish line.
From left: Jeffrey Martin (biking), Tracy Yang (paddling) and Christopher Barnum (running).

(continued from page 1)

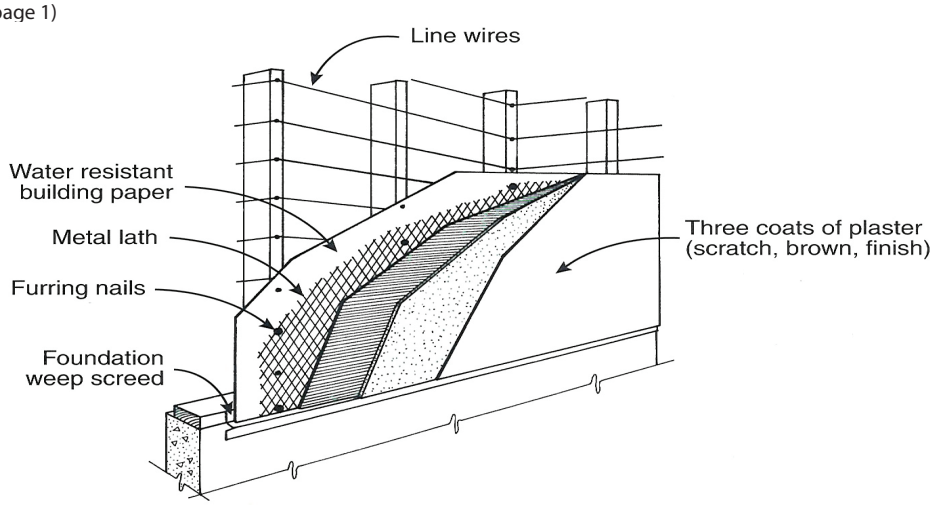

Figure 2 – Cement Plaster Assembly over Open Stud Construction

The assembly relies on the plaster to reject the bulk of rainwater at the surface. Incidental moisture that may penetrate the plaster at cracks, penetrations or terminations is intercepted by WRB and diverted to the base of the drainage plane where it can exit the system through weep holes or flashing. Given the inevitability of incidental moisture and numerous lath fastener penetrations into the WRB, some degree of water intrusion into the wall cavity should be anticipated. The intruding moisture is then anticipated to exit the wall assembly through evaporation and vapor diffusion.

To ensure durability, care must be taken to minimize exposure of the concealed barrier to an excessive volume of moisture, which will accelerate deterioration of the WRB. To this end, design professionals are advised to adopt approaches that exclude open joints, minimize cracks, and facilitate drainage of the cement plaster assembly. Care must also be taken to select the right combination of materials and products to accommodate anticipated water intrusion and vapor diffusion.

Termination of stucco at window framing is a location where careful detailing is required to avoid open joints in cement plaster. Sealant joints are recommended at plaster terminations to window sills and jambs. Vinyl windows specifically, have a high coefficient of thermal expansion, which results in wide separations between the plaster and the window framing. This office has examined and documented accelerated deterioration of the WRB and paper-based flashing associated with excessive incidental moisture at such locations. As an alternate to application of sealant joints at jambs and sills, we recommend selection of windows with integral plaster molding. At window heads, it is also important to use sheet metal drip flashing with closed end caps to prevent ingress of wind driven rainwater.

Hairline cracks are a common feature of cement plaster, but should be kept to a minimum. Adequate spacing of control joints, inclusion of fiber reinforcement admixtures and polymer modified finish coats will minimize cracking in the field of cement plaster. Care must also be taken during the application process to ensure proper curing of the plaster.

All aspects of the design should facilitate drainage and prevent the accumulation of water. Adequate slope of plaster and the substrate should be incorporated into the design of all shelves, recesses and projections. Application of plaster at recessed sills should also be avoided, as lath fastener penetrations at recessed sills have been identified as sources of water intrusion at many project sites. Sheet metal drip flashing should also be sloped to promote drainage (Figure 3). Sheet metal copings are recommended for roof parapets and railing walls in lieu of plaster.

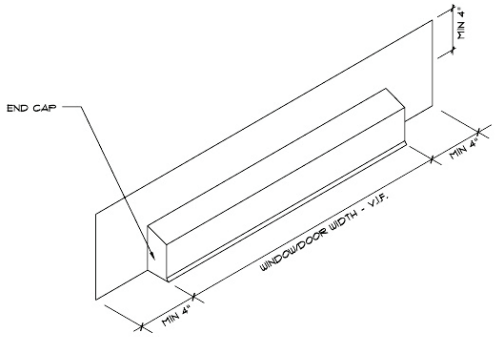

Figure 3 – Sheet Metal Drip Flashing

(continued on page 4)

(continued from page 3)

Choice of material is also an important factor in ensuring durability of the concealed barrier. Spray applied WRBs appear more durable and provide better protection at lath fastener penetrations than asphalt saturated paper (building paper). Regardless, the designer should verify breathability of the selected WRB to accommodate vapor diffusion. Self-adhered membrane (SAM) is highly recommended in lieu of paper based flashing for integration of the WRB at penetrations. Copper and stainless are much more durable than galvanized sheet metal (GSM). Use of GSM flashing when in constant contact with standing water – such as sill pans and wall base flashing at podiums – will results in early corrosion, and should be avoided when possible.

Even with meticulous construction and quality control, ingress of some incidental moisture will be inevitable. Research has indicated that engineered lumber and sheathing will retain a greater quantity of moisture and will deteriorate much faster than plywood and dimension lumber. As such we recommend against using OSB or engineered lumber for sheathing and framing of plaster walls. Furthermore, the prevailing codes and standards allow application of cement plaster over open framing with a single layer of building paper. We urge designers to reconsider such an approach, and at a minimum, use two layers of-60 minute building paper when specifying this assembly.

Comments? Suggestions? Questions?
What would you like to see in future issues of this newsletter?
Contact Jessica Walitt
jwalitt@mcaia.com
(415) 986-3873

NEW MCA WEBSITE

We have launched our new and improved website - ***www.mcaia.com***. Check out detailed information on our services and look through our projects.

From the website you can access past issues of Architechnics, our journal of architectural technology.

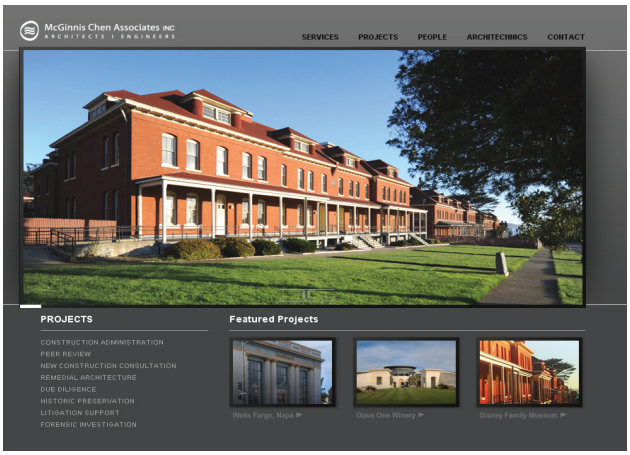

McGinnis Chen Associates, Inc. has been providing specialized architectural and engineering consulting to private, institutional and public property owners since 1963. Over this period we have provided pre-construction, diagnostic and remedial design for many of the San Francisco Bay Area's most prestigious commercial and civic properties as well as hundreds of residential properties. Our clients have included the most experienced property owners, developers, builders, architects, and attorneys as well as single-family and multi-family residential property owners and homeowner associations.